series

897

2-Stage Servovalve
Flow rates up to 230 l/m

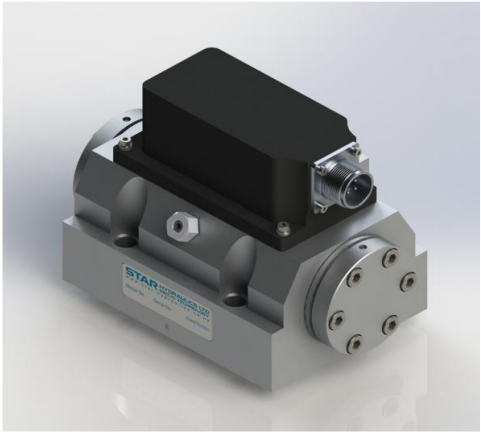

Features

Maximum operating pressure 315 bar
ISO 10372-06-05-0-92 mounting pattern
External pilot supply & return (6 port)
Suitable for 3-way or 4-way applications
Low hysteresis & zero point drift
High spool drive forces
Spool in bushing design
Dry torque motor with mechanical feedback
Long life Sapphire Technology

Star Hydraulics Limited
Severn Drive
Tewkesbury Business Park
Tewkesbury
Gloucestershire
GL20 8SF
England (UK)

www.star-hydraulics.co.uk

ST-897-2016.1-En

Benefits and Features

Sapphire ball in slot design

- Incorporated into Star designs since 1988
- Many billions of cycles per service life
- Increased spool life due to spool rotation
- Ultra low coefficient of friction sapphire to steel
- Feedback mechanism unhindered by spool rotation
- Extended warranties available

Safety

- Flame proof
- Intrinsic safety
- Class, Div & Zone coverage
- Mechanical failsafe
- Double & triple coil redundancy

Quality

- Independant audit process is our commitment on quality
- Focus on customer needs and expectations
- Delivery schedules on time
- Continual improvements on products and services
- Maintaining design and manufacturing integrity

Special projects

- Compact servo designs
- Special interfaces
- Modular components

Custom spool lap & bushing port geometries

- Zero overlap
- Overlap (closed center)
- underlap (open center)
- Dual gain
- Asymmetric gain

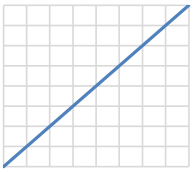

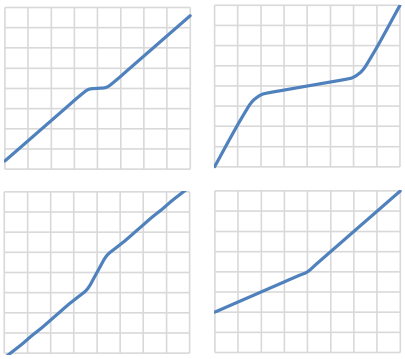

Sealing materials

- Nitrile
- Fluorocarbon (Viton)
- Ethylene-Propylene
- Fluorosilicone

Sapphire flow

- Ensuring first stage stability
- Precisely matched flow properties
- Long life in extreme environments

Special connectors

- MIL-C-5015
- MIL-DTL-38999
- Conduit style male/female
- Hermetic

Technical data

Hydraulic

Nominal flow ratings [±10%]	at 70 bar Δp	95, 150, 230 l/m	
Operating pressure (max)	Ports	P, C1, C2, X	R, Y
Seal material	*NBR, FPM*	315 bar	315 bar
	EPDM	280 bar	210 bar
Fluid viscosity range (recommended)		10 to 100 mm^2/s (cSt)	
Fluid type		Mineral oil to ISO 11158, DIN 51524 or equivalent	
		MIL-H-5606	
		Skydrol	
		Kerosene	
		Water glycols	
		others on request	
Filter rating (recommended)	Pressure line	Beta 10 = 200 (10 µm abs), non by-pass & indicator	
	Off-line	Beta 2 = 1000 (2 µm abs)	
Fluid cleanliness	ISO 4406: 1999		
	minimum	16/ 14/ 11	
	recommended	15/ 13/ 10	

Operational parameters

Hysteresis		≤ 4.0% without dither
Threshold		≤ 1.5% without dither
Null shift	ΔT 40°C	≤ 3.0%
Internal leakage	140 bar supply (0.5% overlap)	
	95 l/m	≤ 2.0 l/m
	150, 230 l/m	≤ 4.0 l/m
Load pressure difference	1% input	≥ 30% of supply pressure can be as high as 100%
Response time	0-100% rated spool stroke	
	95, 150 l/m	18 ms
	230 l/m	36 ms
Mounting pattern		ISO 10372-06-05-0-92 with X and Y port
Mounting position		Any, fixed or movable (1)
Weight	std unit	3.4 kg
	additional filter housing	4.7 kg
Design protection	EN 60529	IP 65
Shipping protection		Sealed base plate
Vibration		30 g all axis, 5 Hz to 2,000 Hz
Shock		30 g all axis
Seal material options		NBR, FPM, EPDM
Temperature range		-30 to 135 °C

(1) Depending on valve orientation the main stage spool may drop when pilot supply pressure is switched off leading to unwated startup bump. If so then apply pressure to the first stage pilot via the X port prior to applying pressure at the main stage.

Technical data

Electrical

Rated input ± (mA)	single (differential)	**8**	**15**	**30**	**40**	**100**	**200**
Other coil rates available	series	4	7.5	15	20	50	100
	parallel	8	15	30	40	100	200
Coil resistance (Ω)	per coil	1000	200	300	80	28	22
Power (W)	single	0.064	0.045	0.27	0.128	0.280	0.88
	series	0.032	0.023	0.135	0.064	0.140	0.440
	parallel	0.032	0.023	0.135	0.064	0.140	0.440
Connector pin out identification	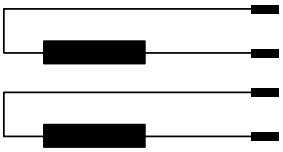	A B C D					
Polarity P»C2, C1»R	single	A +, B - or C +, D -					
	series	A +, D -, B & C linked					
	parallel	A & C linked +, B & D linked					
Valve connector type	MIL-C-5015	MS3102E-14S-2P mates with MS3106F-14S-2S					
		Consult factory for more options					
Standard connector orientation		C2 port					
	also available over	C1 port; please advise when ordering					

15 mA 200 ohm coil rate not available with rated flow of 230 l/m.

Technical data

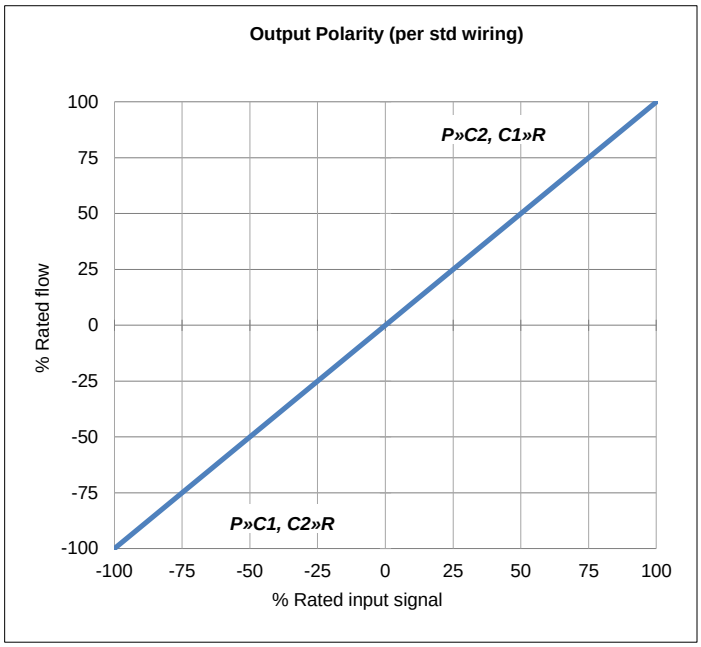

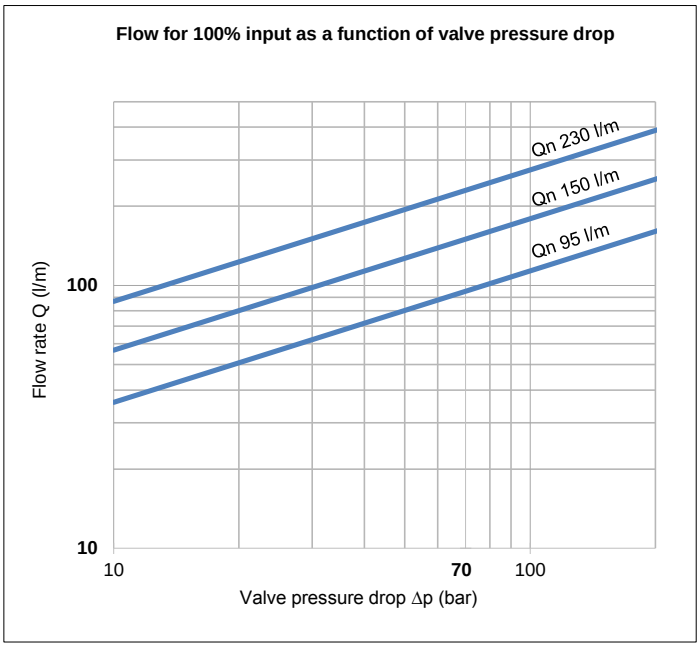

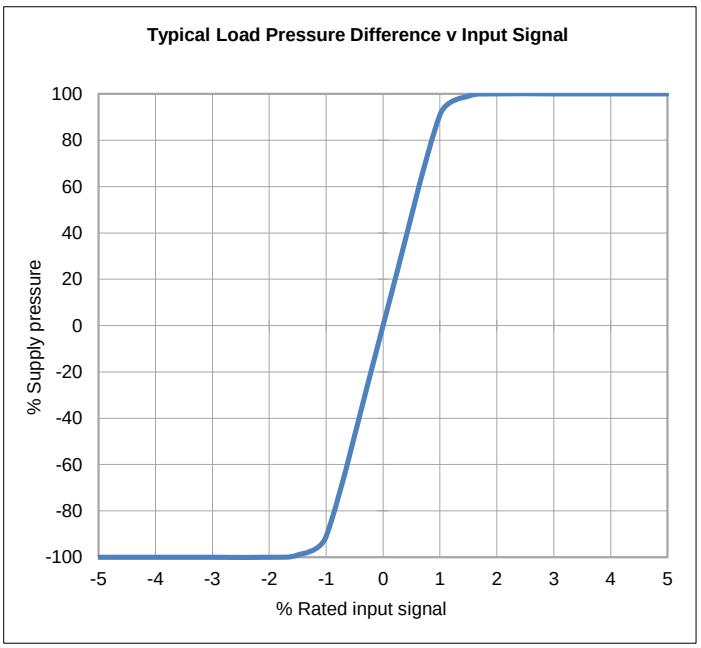

The flow tolerance for standard servovalves is ±10% of the rated flow at 100% rated input signal.

Rated Signal [In] is the specified input voltage or current of either polarity to produce rated flow. Rated input does not include null bias values.

Rated flow corresponds to the flow at rated input at 10 bar or 70 bar, with no load, therefore in 4-way valves there will be a pressure drop of 5 bar or 35 bar respectively across each land.

Load pressure difference versus input signal indicates typical differential pressure gain between ports C1 (A) and C2 (B) for standard lap spools. Negative and positive overlap change this characteristic signifcantly.

Internal leakage comprises of tare first stage and laminar leakage between spool and sleeve. With critical lap conditions in 4-way designs the leakage peaks through the null region.

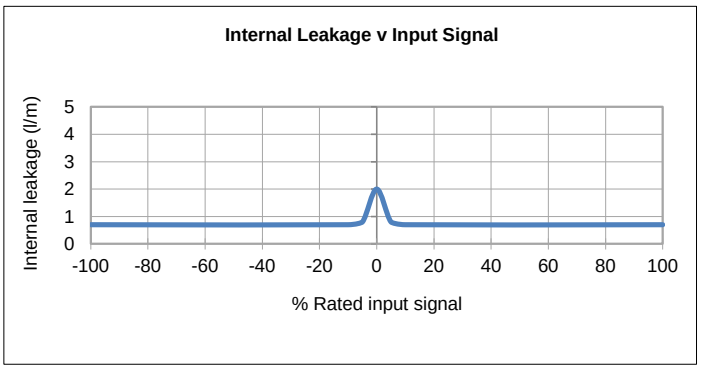

Technical data

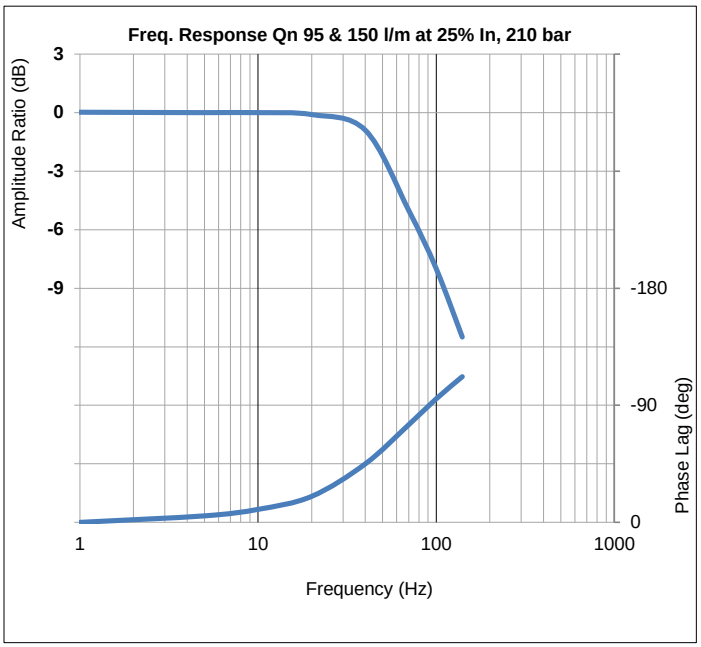

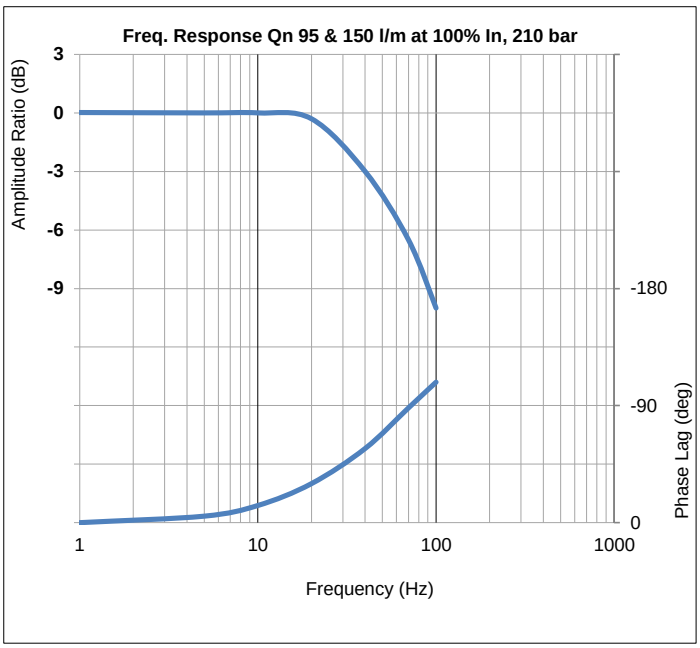

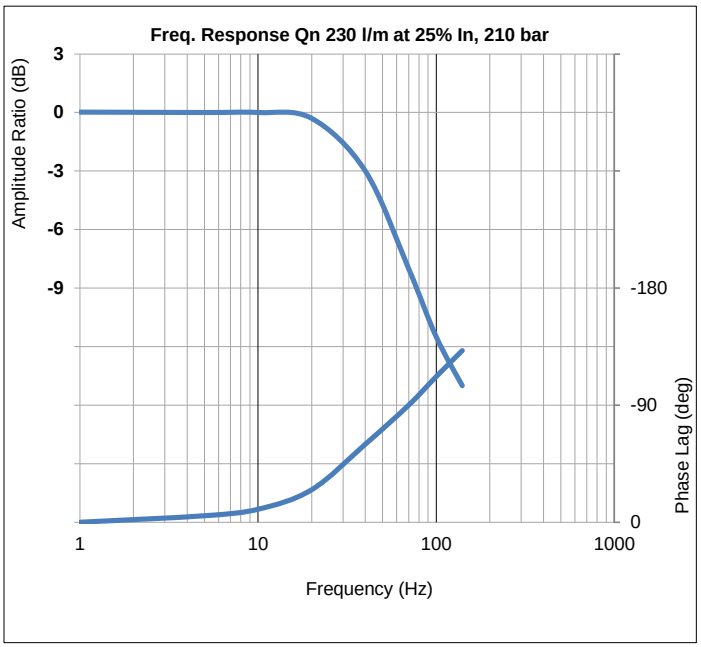

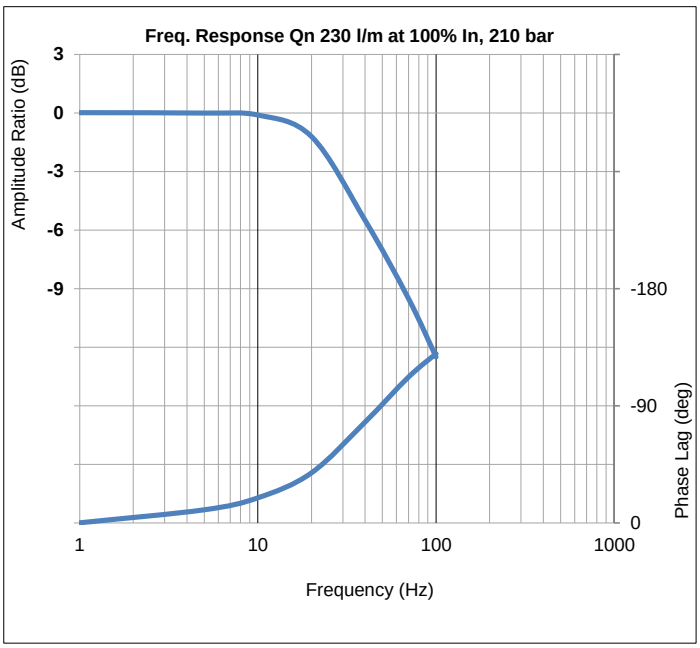

INSTALLATION DETAILS

Mounting screws	Skt head cap screws M10 x 55 10.9 ISO 4762
Null adjust (Mechanical)	- 3.0 hex skt & 13 A/F lock nut - slacken lock nut (ccw) half-turn with 13 A/F ring spanner - insert 3.0 hex key into socket and rotate to obtain required null / offset value - hold hexagon key in desired position then tighten lock nut to 3 Nm
Porting details	P, C1, C2, R ports ∅15.8, ⌴ ∅23.8 ↧1.40 on 50.8 P.C.D. X port ∅3, ⌴ ∅12.7 ↧1.40 Y port ∅3, ⌴ ∅9.5 ↧1.40
Interface seals	Ports P, C1, C2, R - ID 20.35 x ∅1.78 O-Ring Port X - ID 9.25 x ∅1.78 O-Ring Port Y - ID 6.07 x ∅1.78 O-Ring
(1) Optional filter housing	Replacement cartridge PN: SRS1479

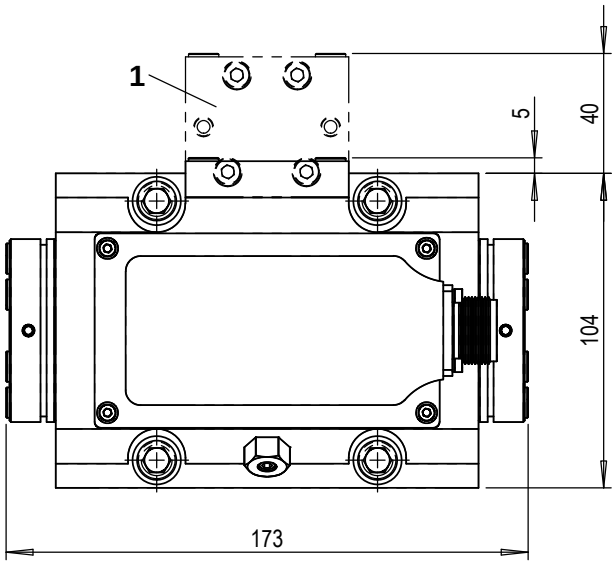

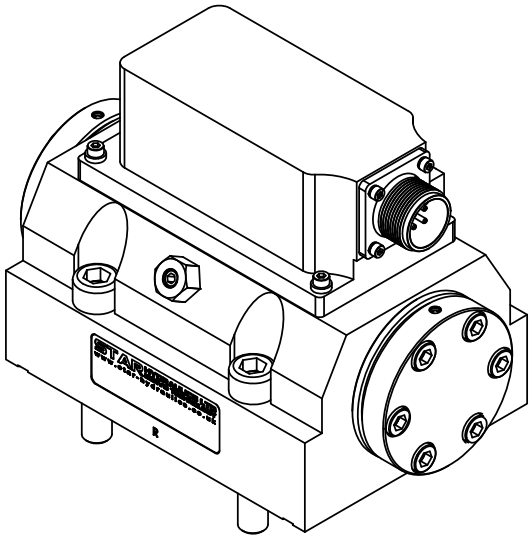

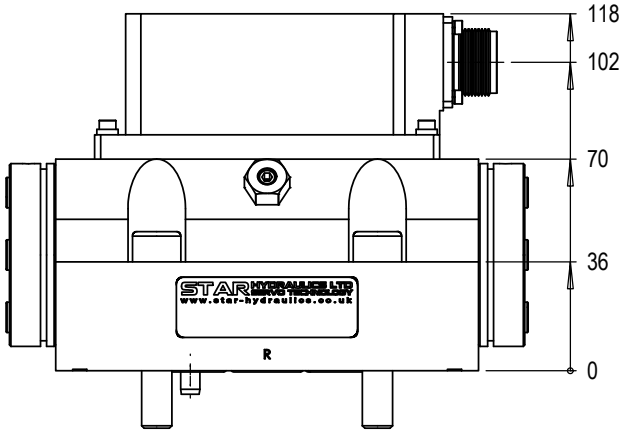

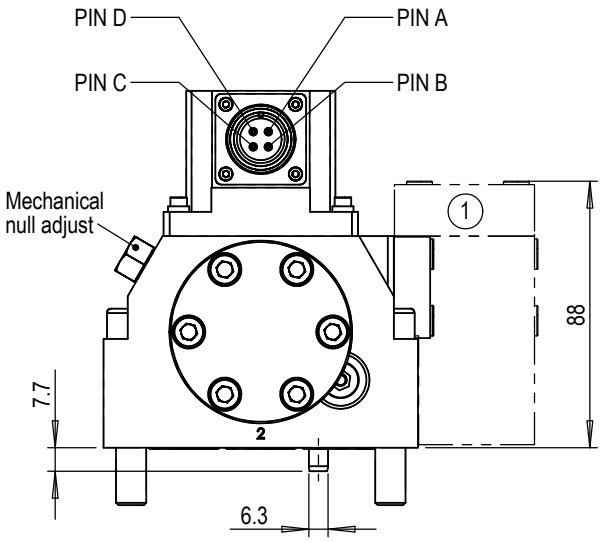

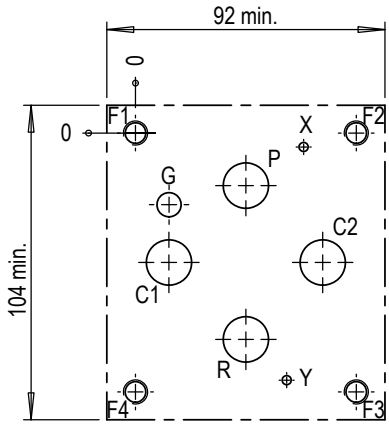

Mounting interface conforms to ISO 10372-06-05-0-92											
	P	C1	C2	R	X	Y	F1	F2	F3	F4	G
size	∅15	∅15	∅15	∅15	∅3	∅3	M10	M10	M10	M10	∅8↧9
x	36.50	11.10	61.93	36.50	55.60	50	0	73	73	0	11.10
y	17.38	42.80	42.80	68.23	4.60	81.70	0	0	85.60	85.60	23.70
Surface flat within 0.01 / 100 : finish better than 0.8 µm											